Technaxx® * User Manual

Binoculars with camera TX-351

Before using the appliance for the first time, please read the instructions for use and safety information carefully.

This appliance is not intended for use by persons (including children) with reduced physical, sensory or mental capacities, or by persons lacking in experience or knowledge, unless they are supervised or instructed on the use of this device by a person responsible for their safety. Children should be supervised to ensure they do not play with this device.

Keep this user manual for future reference or product sharing carefully. Do the same with the original accessories for this product. In case of warranty, please contact the dealer or the store where you bought this product.

Enjoy your product * Share your experience and opinion on one of the well-known internet portals.

Specifications are subject to change without notice - please be sure to use the latest manual available on the manufacturer's website.

Features

- 10x magnification
- Field of view from 101m to 1000m
- Binoculars with focusing range from 3m to infinity
- Camera with focusing range from 50m to infinity
- HD photo resolution
- VGA video resolution
- MicroSD card up to 32GB (not included)

Product overview

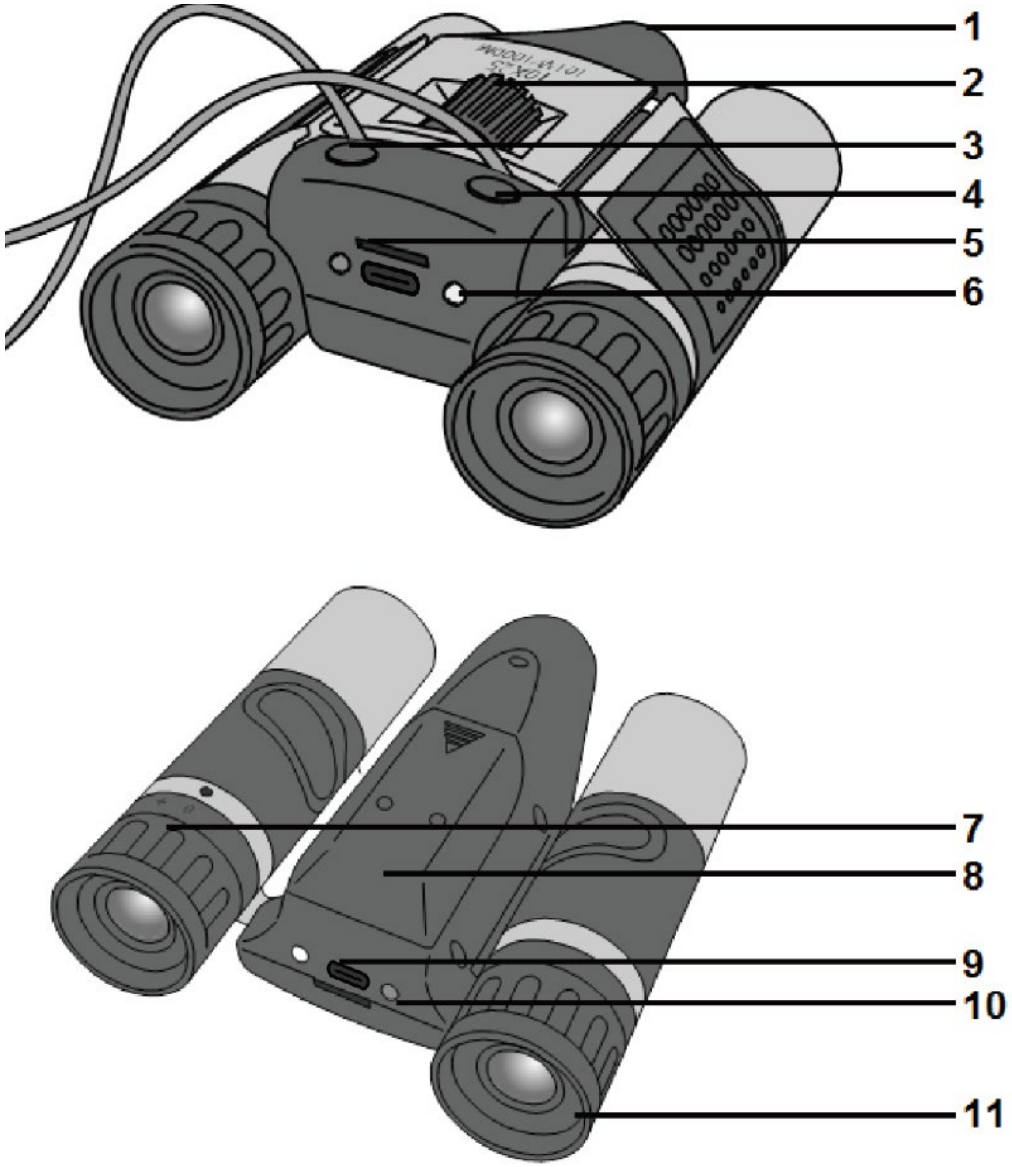

1	Camera lens	7	Diopter adjustment
2	Focus wheel	8	Battery cover
3	On/Off / Shutter	9	USB port
4	Video button	10	Red LED
5	MicroSD card slot	11	Rubber eyecup
6	Blue LED		

Technical specifications

Magnification	10x
Lens diameter	25mm
Field of view	101m to 1000m
Sensor type	CMOS
Effective pixels	1.3 million
Photo file size	1280x960
Video resolution / frame rate	640x480 / 30fps
Photo / video / audio format	JPEG / MPEG / 16-bit
Connection	USB-C
Memory expansion	MicroSD up to 32GB (not included)
Weight / Dimensions	230g / 17.2x13.5x6.5cm
Power supply	2x AA batteries (LR6, Lithium-NiMH) (not included)
Packaging contents	Technaxx TX-351, USB-C cable, cleaning cloth, user manual

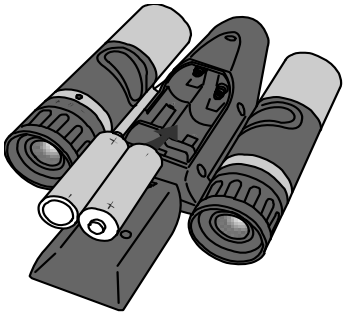

Insert or replacing the batteries

Remove the battery cover (8) on the back of the device. Insert two new AA batteries (1.5V LR6), observing the correct polarity. Close the battery compartment afterward with the battery cover.

Note: Please use new batteries. Mixing batteries with different charge levels may cause problems.

Adjustment

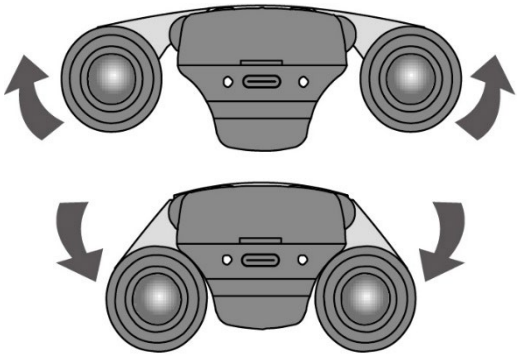

The distance between the eyes, also called the interpupillary distance, varies from person to person. Follow these simple steps to ensure perfect alignment of the lens to your eyes:

1. Hold your binoculars in the normal viewing position.
2. Grip the eyepieces firmly with both hands. Move the eyepieces closer together or further apart until you see a single circular field of view. Always return your binoculars to this position.

Note: If you're too close or too far from the target, you won't get optimal photo or video quality. Stand between 101 and 1000 meters from the target. If you're less than 101 meters from the target, the frame may be distorted and the photo or video may be slightly shifted downward.

Starting up

Press the power button (3) for 2 seconds to turn on the device. The red LED will flash twice. The device is now in standby mode. In standby mode, the red and blue LEDs will flash alternately (every 2 seconds).

Inserting the MicroSD card

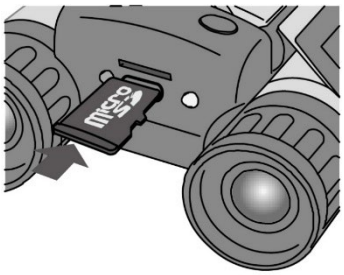

Insert the MicroSD card into the MicroSD card slot (5). If the MicroSD card is not recognized or there is insufficient storage space, the red LED will glow continuously and the blue LED will flash 8 times. The device will then shut down.

Note: Proper operation cannot be guaranteed for all memory cards.

Video recording function

Briefly press the video button (4). The device will start recording a video. During recording, the blue LED will flash and the red LED will turn off. To stop recording, press the video button (4) again. The device will return to standby mode and the video file will be saved. **Note:** If there is insufficient space on the MicroSD card, the red LED will remain lit and the blue LED will flash 8 times. The device will then turn off.

Photo function

Press the camera shutter button (3). The device takes a photo. The blue LED and the red LED will flash simultaneously. The device saves the photo and returns to standby mode.

Turn off

Press the On/Off button. If the device is currently recording a video, the video file will be saved. The blue LED and the red LED will flash five times simultaneously before the device finally turns off. **Note:** If the device is in standby mode for five minutes and is not used within this time, it will automatically turn off. If the battery is too low, the blue LED will remain lit and the red LED will flash eight times. switches itself afterward out of.

Connection with the computer

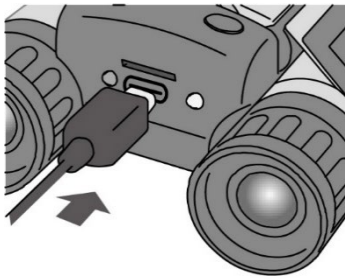

Connect the USB cable to the device as shown in the image. Connect the other end to your computer. Once connected to the computer, the device will automatically enter USB mode. The red LED will light up and the blue LED will flash.

Date and time setting

Connect the Binoculars with the PC after insert a MicroSD card.

1. Create a new text file called **'time'**.
→Access the desktop →Right click →Click **New** →click **Text Document** →Now you can replace the file name with **'time'.**

2. Open the **time** file **and** enter the date and time as follows:

YYYY-MM-DD(space)HH:MM:SS
(Example: →2025-04-28 23:59:59)

3. Now save the file.

4. Copy the file to the MicroSD card you want to use.

Note: When you replace the batteries, the date and time must be reset.

Care and maintenance

● Clean the device only with a dry or slightly damp, lint-free cloth. ● Do not use abrasive cleaners or harsh detergents to clean the device. ● Store the device in a dry and safe place, away from moisture and extreme temperatures. ● Regularly remove dust and dirt from the lenses to maintain the quality of vision. ● Do not use the device if it shows any visible damage and have it checked by a specialist. ● Remove the batteries before long periods of storage to prevent leakage.

Safety instructions

● Never use the device to look directly at the sun or in close proximity to it. This could damage your eyesight. ● Children should only use the device under adult supervision. ● Keep packaging materials such as plastic bags and rubber bands away from children to avoid the risk of suffocation. ● To prevent damage, avoid exposing the device to extreme temperatures or strong sunlight. ● Never expose the device to strong shocks or vibrations to avoid damaging the sensitive components. ● To avoid injury or damage, do not disassemble the device. ● Always consider the privacy of others when using the device.

Notes on use

● Use the device exclusively for private use and not for commercial purposes. ● Make sure to use the device according to the operating instructions. ● Do not immerse any part of the device in water or other liquids. ● Do not use the device with wet hands. ● When disconnecting the cable, always pull on the plug and not the cable. ● To avoid accidents, prevent the power cord from hanging over the edge of tables or work surfaces. ● Do not remove the memory card while recording video to prevent data loss or damage. ● Remove the batteries from the device after use. ● Avoid using the device in extreme temperatures (very hot or very cold). ● Do not store the device in humid environments. ● Avoid using in rain or water to prevent damage.

Support

Service phone No. for technical support: **01805 012643*** (14 cent/minute from German fixed-line and 42 cent/minute from mobile networks). Free Email: **support@technaxx.de**

The support hotline is available Mon-Fri from 9am to 1pm & 2pm to 5pm

In the event of anomalies and accidents, please contact: **gpsr@technaxx.de**

Declaration of Conformity

Technaxx Deutschland GmbH & Co. KG hereby declares that the equipment type TX-351 Prod. ID.:5336 is in compliance with Directive 2014/30/EU. The full text of the EU Declaration of Conformity is available at the following internet address: www.technaxx.de/reseller

Disposal



Disposal of the packaging. Sort packaging materials by type upon disposal.
Dispose of cardboard and paperboard in the waste paper. Foils should be submitted for recyclables collection.



Disposing of old equipment (Applies in the European Union and other European countries with separate collection (collection of recyclable materials) Old equipment must not be disposed of with household waste! Every consumer is required by law to dispose of old devices that can no longer be used separately from household waste, e.g. at a collection point in his or her municipality or district. This ensures that the old devices are properly recycled and that negative effects on the environment are avoided. For this reason, electrical devices are marked with the symbol shown here.



Batteries and rechargeable batteries must not be disposed of in household waste! As a consumer, you are required by law to dispose of all batteries and rechargeable batteries, whether they contain harmful substances* or not, at a collection point in your community/city or with a retailer, to ensure that the batteries can be disposed of in an environmentally friendly manner. * Marked with: Cd = cadmium, Hg = mercury, Pb = lead. Return your product to your collection point with the fully discharged battery installed inside!

Made in China; Distributed by:
Technaxx Deutschland GmbH & Co. KG,Konrad-Zuse-Ring 16-18,
61137 Schöneck, Germany